EDISON LIGHTING GROUP

ED HEXAGON+

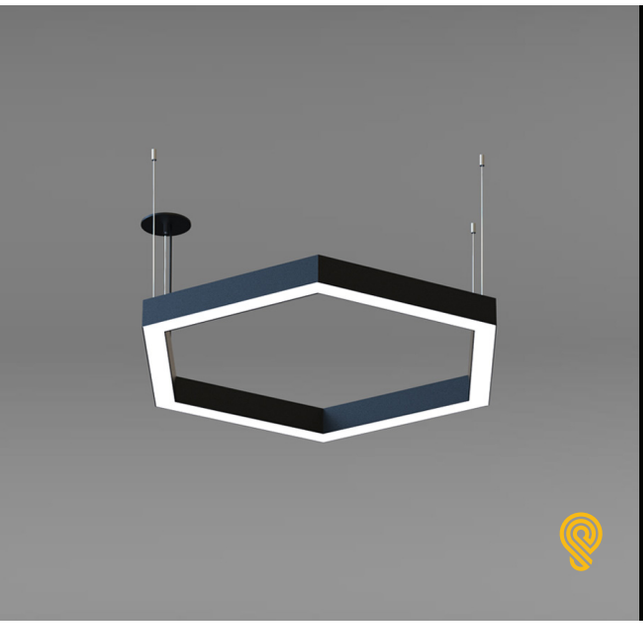

FEATURES:

- Architectural luminaire with direct distribution.
- Light source: LED board or LED strip.
- Even illumination is provided by a high-efficiency opal lens.
- Suitable for surface, suspended and recessed installations.
- Extruded aluminum body comes with a standard black or white finish.
- Also available with custom color options.
- LED strips are rated for 60,000 hrs. L80 with +90 CRI.
- Has a proven record in office, commercial and retail installations.
- Custom modifications are available.
- ED luminaires are certified to CSA and UL standards.

reinventlight

SPECIFICATION:

ED HEXAGON+ [SIZE] — [SOURCE] — [RADIANCE] — [VOLTAGE] — [DRIVER] — [MOUNTING] — [LENS] — [FINISH] — [CCT] — [OPTIONS]

Enter the Product Code into the boxes above.

SIZE

_____ ft

2-8 ft Arm length.

SOURCE

- ☐ 5W/ft
- ☐ 7W/ft
- ☐ 10W/ft

RADIANCE

- ☐ DD - Direct

VOLTAGE

- ☐ UNV - 120/277V
- ☐ 347V [1]

1. Verify availability.

DRIVER

- ☐ ST - On/Off
- ☐ DL - 0-10V Dim (1%)
- ☐ DLO - 0-10V Dim (to Off)
- ☐ DL2 - 0-10V Dim (TW)
- ☐ DLA - 0-10V Dim (Aux)
- ☐ DA4 - DALI D4i
- ☐ CV - Constant Voltage (RGBW)
- ☐ ____

Specify dimming protocol.

MOUNTING

- ☐ S6B - 6ft Cord BK [1]
- ☐ S6W - 6ft Cord WH [1]
- ☐ S ____ ft [2]
- ☐ SF - Surface Mount
- ☐ RT - Recessed Trimless

1. Canopy match the Cord color.
2. Specify Suspension length/color.

LENS

- ☐ OP - Opal

FINISH

- ☐ BK - Black[1]
- ☐ WH - White[2]
- ☐ CF/RAL ____

1. RAL 9005
2. RAL 9016

Specify required RAL number.

CCT

- ☐ 30K - 3000 Kelvin/90CRI
- ☐ 35K - 3500 Kelvin/90CRI
- ☐ 40K - 4000 Kelvin/90CRI
- ☐ RGBW[1]
- ☐ TW - Tunable White (27K-65K)[2]
- ☐ ____

1. Available with DMX or CB.
2. Available with DL2, DA4 or CB.

Specify required CCT.

OPTIONS

- ☐ No Options[1]
- ☐ EC - Emergency Circuit
- ☐ CB - Casambi Bluetooth(TW, RGBW)
- ☐ DMX - DMX (RGBW)
- ☐ AWN - Athena Wireless Node (DLA)

1. Leave empty.

LUMEN OUTPUT W/ft:

Watts	30K	35K	40K
5W	515lm	525lm	535lm
7W	720lm	735lm	750lm
10W	1030lm	1050lm	1080lm

Intertek DIMMABLE Declare.

Project:

Type:

905-830-0339 / 1-800-667-9281 | info@edisonlighting.ca | www.edisonlighting.ca

Specifications are subject to change without notice. Every effort has been made for accuracy and errors are unintentional.

EDISON LIGHTING GROUP

ED HEXAGON+

SIZE:





RADIANCE:

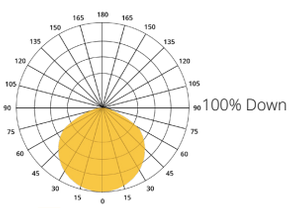

☐ Direct

MOUNTING:

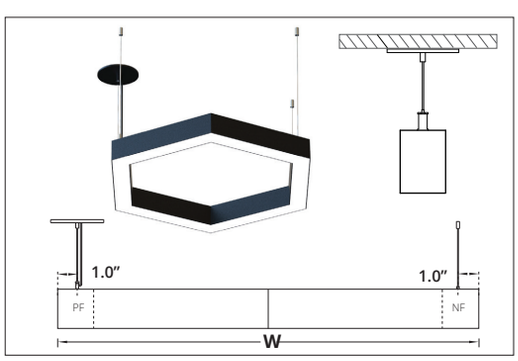

SUSPENDED

PF - Power Feed
NF - Non Power Feed

Size	Arm - A		L x W[1]
2 ft	1.0 ft	12.84 in	25.67 x 22.23
3 ft	1.5 ft	18.34 in	36.67 x 31.76
4 ft	2.0 ft	25.60 in	51.17 x 31.76
5 ft	2.5 ft	31.08 in	62.17 x 53.84
6 ft	3.0 ft	36.44 in	72.88 x 63.12
7 ft	3.5 ft	42.08 in	84.17 x 72.90
8 ft	4.0 ft	49.34 in	98.67 x 85.45

A - Arm Length
L - Total Length
W - Total Width
1. All dimensions are in Inches.

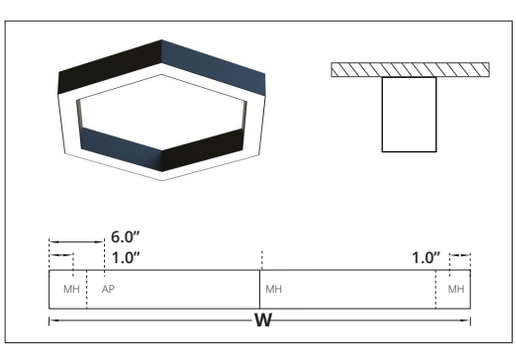

SURFACE MOUNT

AP - Access Power Plate
MH - Mounting Hole

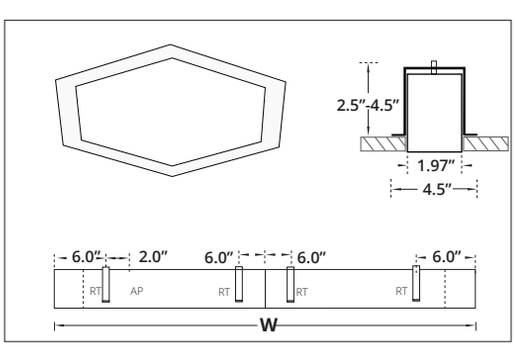

RECESSED TRIMLESS

AP - Access Power Plate
RT - Recessed Trimless Bracket
Cutout Dimensions = Total Length x Width of Extrusion.

905-830-0339 / 1-800-667-9281 | info@edisonlighting.ca | www.edisonlighting.ca

Specifications are subject to change without notice. Every effort has been made for accuracy and errors are unintentional.